Piston with compensation spring
PATENTED

C-shaped support

AWARD-WINNING PRODUCT
FOR THE USE OF ULTRA-LIGHT STEELS
HIGH-STRENGTH STRENX

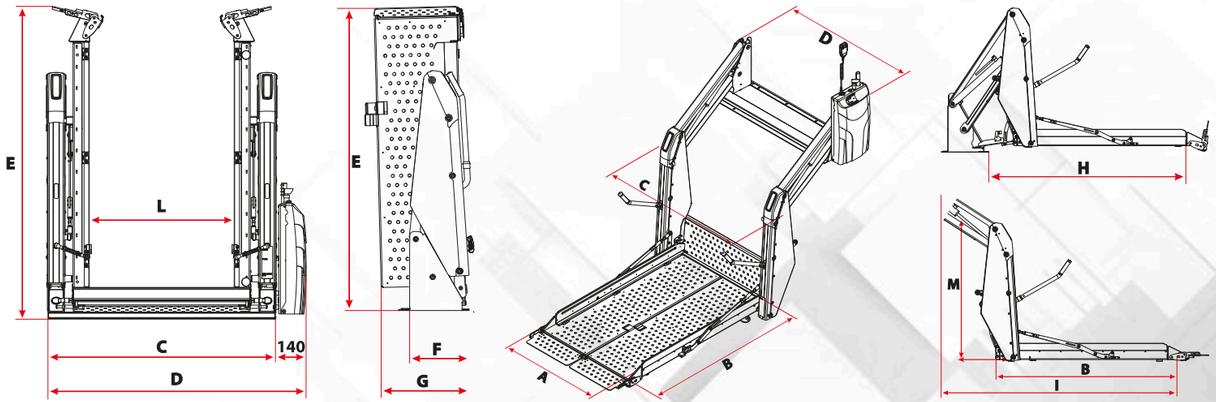

Available sizes (mm)														Peso a secco (Kg)
	Cod.	Cod. led	A	B	C	D	E	F	G	H	I	L	M	
Vertical Split 80x130 (A)	106020	106021	800	1300	1050	1190	1450	330	450	1570	1720	670	1000	129
Vertical Split 76x105 (B)	106022	106023	760	1050	970	1110	1170	320	430	1330	1530	630	800	109
Vertical Split 66x96 (B)	106024	106025	660	960	870	1010	1090	320	420	1240	1440	530	800	90

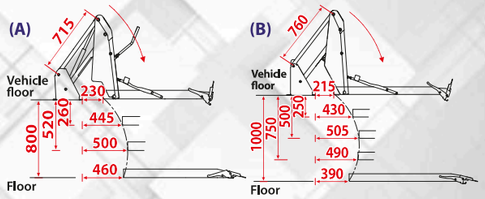

VERTICAL SPLIT LIFT

Capacity 350 kg

News 2024 from Fadiel Italiana, available in three sizes to allow installation on any type of vehicle, even on the side door. Like all Fadiel lifts, it is made of aluminium and special high-strength Strenx steel, materials that give the product lightness and at the same time extreme strength.

INNOVATIVE

The product features numerous innovations compared to similar products on the market, such as the closure between the two decks with a **C-shaped** support, a feature that prevents the decks themselves from separating when closed and aligned.
Another huge innovation is the presence on the two walking surfaces of **pistons with compensation springs** (patented), which allow for the perfect alignment of the two floors even in the presence of uneven flooring.

VISIBILITY

The special design of the lift allows complete rear visibility when viewed from the rear-view mirror.

CONVENIENT LOADING AND UNLOADING

Once folded, the lift allows easy loading and unloading of bags, trolleys, suitcases and quaslais other objects, even large ones.

ANTI-SLIP FLOOR

The walking surface is made of punched aluminium, making it robust, without welding seams and with excellent grip.

EASY TO USE

Loading and unloading can be followed with two buttons.

SILENCE

The lift is equipped with special rubber shock absorbers that make it the quietest in the world while driving.